Cambridge Assessment International Education

Cambridge International AS & A Level

CANDIDATE NAME

CENTRE NUMBER

CANDIDATE NUMBER

7055661508

PHYSICS **9702/52**

Paper 5 Planning, Analysis and Evaluation **October/November 2021**

1 hour 15 minutes

You must answer on the question paper.

No additional materials are needed.

INSTRUCTIONS

- Answer **all** questions.
- Use a black or dark blue pen. You may use an HB pencil for any diagrams or graphs.
- Write your name, centre number and candidate number in the boxes at the top of the page.
- Write your answer to each question in the space provided.
- Do **not** use an erasable pen or correction fluid.
- Do **not** write on any bar codes.
- You may use a calculator.
- You should show all your working and use appropriate units.

INFORMATION

- The total mark for this paper is 30.
- The number of marks for each question or part question is shown in brackets [ ].

This document has **8** pages.

© UCLES 2021

[Turn over

1 A student investigates the extension of a spring supporting a wooden strip, as shown in Fig. 1.1.

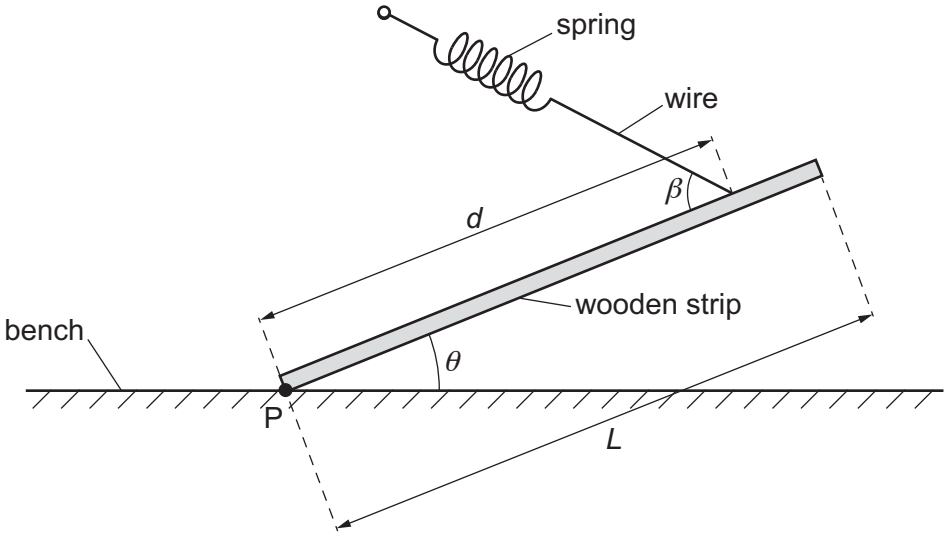

Fig. 1.1

One end of the strip is at point P. The strip has length L and is at an angle θ to the bench.

The spring is attached to the strip by a wire at a distance d from point P. The wire is at an angle β to the strip. The spring has extension x.

It is suggested that the relationship between x and θ is

$$\frac{WL}{2}\cos\theta = kxd\sin\beta$$

where k is the spring constant of the spring and W is a constant.

Design a laboratory experiment to test the relationship between x and θ.
Explain how your results could be used to determine a value for W.

You should draw a diagram, on page 3, showing the arrangement of your equipment. In your account you should pay particular attention to:

- the procedure to be followed
- the measurements to be taken
- the control of variables
- the analysis of the data
- any safety precautions to be taken.

© UCLES 2021

Diagram

.....

.....

.....

.....

.....

.....

.....

.....

.....

.....

.....

.....

.....

.....

.....

.....

.....

.....

2 A Geiger–Müller (G–M) tube is a device that can detect beta-radiation. A student places paper between a radioactive source emitting beta-radiation and a G–M tube, as shown in Fig. 2.1.

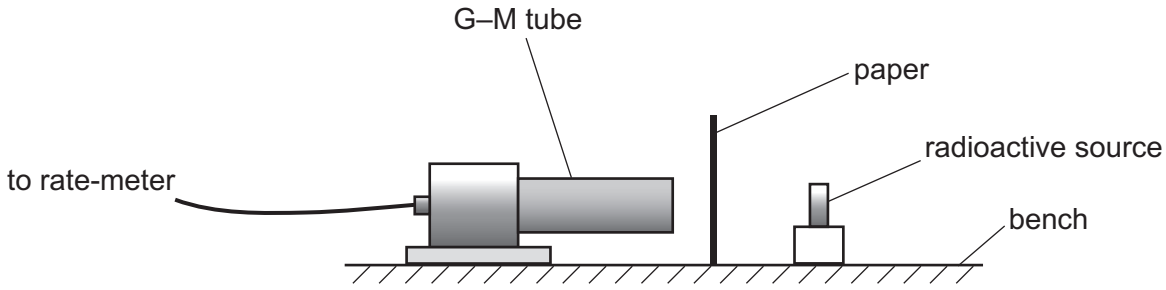

Fig. 2.1

The G–M tube is connected to a rate-meter which records the count rate R.

The thickness t of the paper is measured in two different places using a micrometer.

The student repeats the experiment for different thicknesses of paper.

It is suggested that R and t are related by the equation

$$R = R_0 e^{-\mu t}$$

where R_0 is the count rate without any paper and μ is a constant.

(a) A graph is plotted of $\ln R$ on the y-axis against t on the x-axis.

Determine expressions for the gradient and y-intercept.

gradient = ...

y-intercept = ...

[1]

(b) The two measurements of thickness are t_1 and t_2. Values of t_1, t_2 and R are given in Table 2.1.

Table 2.1

t_1 / mm	t_2 / mm	average t / mm	R / s^{-1}	ln (R / s^{-1})
0.19	0.13		47.7	
0.22	0.28		44.0	
0.39	0.45		38.2	
0.58	0.54		34.3	
0.64	0.68		31.7	
0.78	0.74		29.7	

Calculate and record values of average t / mm and ln (R / s^{-1}) in Table 2.1.
Include the absolute uncertainties in average t. [2]

(c) (i) Plot a graph of ln (R / s^{-1}) against average t / mm.
Include error bars for average t. [2]

(ii) Draw the straight line of best fit and a worst acceptable straight line on your graph. Both lines should be clearly labelled. [2]

(iii) Determine the gradient of the line of best fit. Include the absolute uncertainty in your answer.

gradient = ... [2]

© UCLES 2021

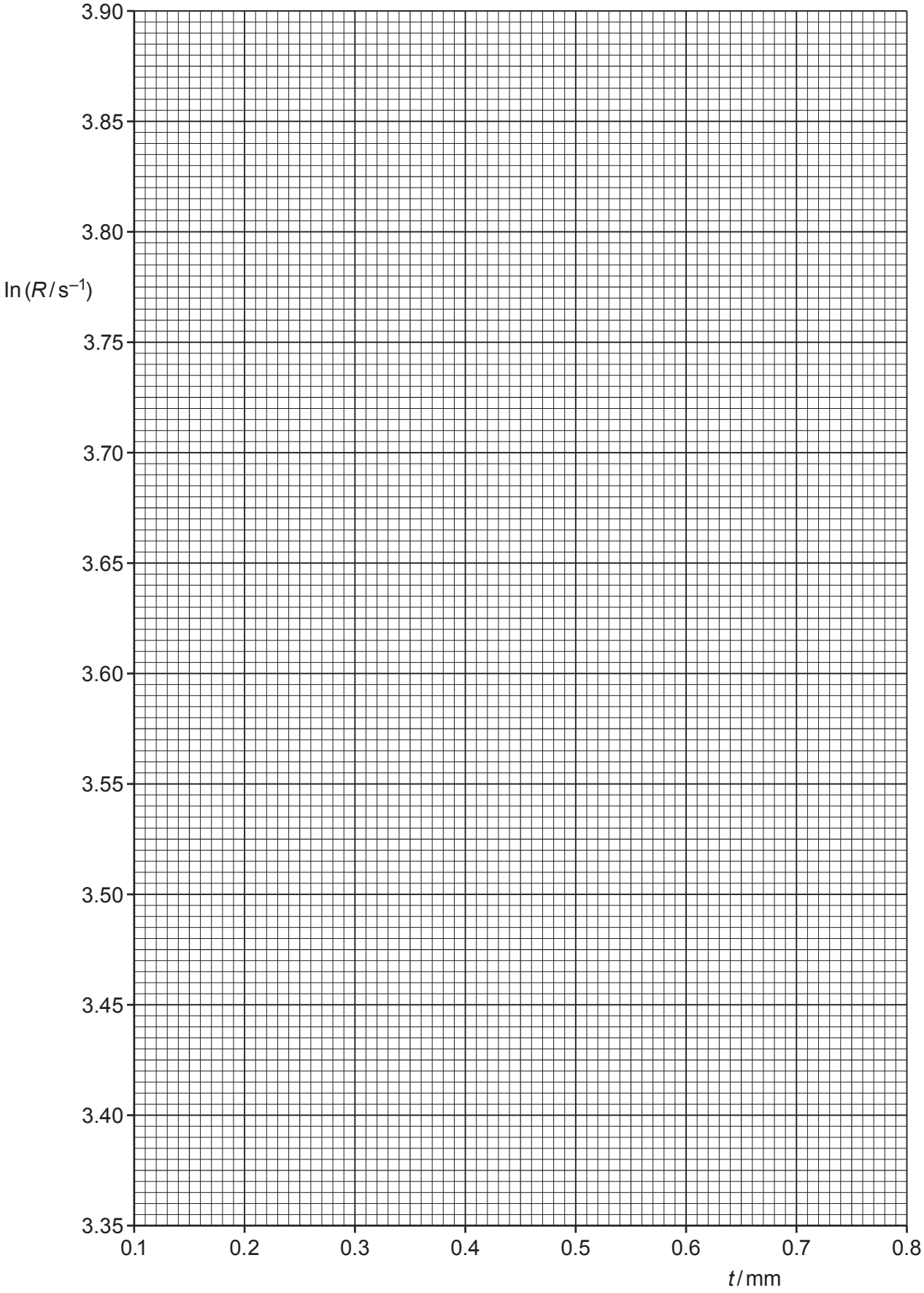

© UCLES 2021

[Turn over

(iv) Determine the *y*-intercept of the line of best fit. Include the absolute uncertainty in your answer.

y-intercept = ... [2]

(d) Using your answers to **(a)**, **(c)(iii)** and **(c)(iv)**, determine the values of μ and R_0. Include the absolute uncertainties in your values and include appropriate units.

μ = ...

R_0 = ...
[3]

(e) The experiment is repeated using a different thickness of paper.

Determine the value of t that would give a value of R of $20.0\,s^{-1}$.

t = ... mm [1]

[Total: 15]

Permission to reproduce items where third-party owned material protected by copyright is included has been sought and cleared where possible. Every reasonable effort has been made by the publisher (UCLES) to trace copyright holders, but if any items requiring clearance have unwittingly been included, the publisher will be pleased to make amends at the earliest possible opportunity.

To avoid the issue of disclosure of answer-related information to candidates, all copyright acknowledgements are reproduced online in the Cambridge Assessment International Education Copyright Acknowledgements Booklet. This is produced for each series of examinations and is freely available to download at www.cambridgeinternational.org after the live examination series.

Cambridge Assessment International Education is part of the Cambridge Assessment Group. Cambridge Assessment is the brand name of the University of Cambridge Local Examinations Syndicate (UCLES), which itself is a department of the University of Cambridge.